THIS DRAWING IS UNPUBLISHED. RELEASED FOR PUBLICATION 20
© COPYRIGHT 20 - ALL RIGHTS RESERVED.

REVISIONS

P	LTR	DESCRIPTION	DATE	DWN	APVD
	B2	REVISED PER ECR-16-011494	20JUN2017	NK	CX
	B3	REVISED PER ECR-16-017083	29DEC2017	C.X	D.Z
	B4	ECO-19-006934	13MAY2019	AP	WS

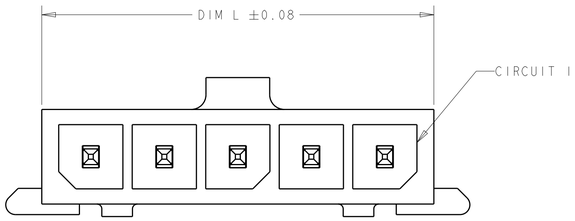

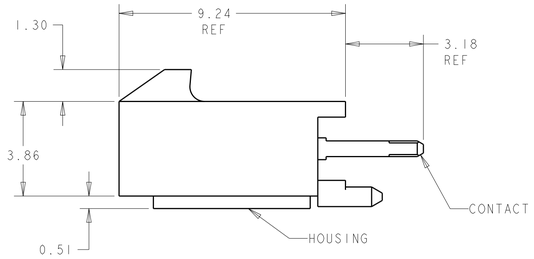

1. MATERIAL: CONTACTS - BRASS
HOUSING - UL 94V-0 RATED HIGH TEMP NYLON, COLOR BLACK.

2. PLATING: CONTACTS - 0.76µm MINIMUM GOLD ON MATING END,
2.54µm MINIMUM TIN LEAD ON SOLDER TAILS, BOTH OVER
1.27µm MINIMUM NICKEL.

4. RECOMMENDED PC BOARD THICKNESS OF 1.57.

5. RETENTION BUMP FEATURES FACE EACH OTHER, TYPICAL
ALL CONFIGURATIONS.

6. PLATING: CONTACTS - 0.76µm MINIMUM GOLD ON MATING END,
2.54µm MINIMUM MATTE TIN ON SOLDER TAILS, BOTH OVER
1.27µm MINIMUM NICKEL.

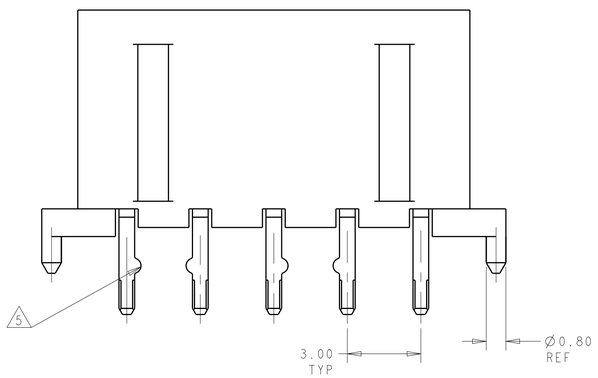

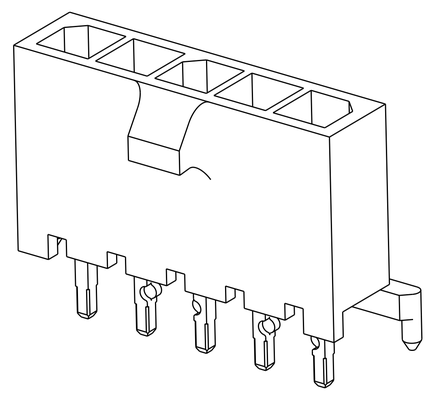

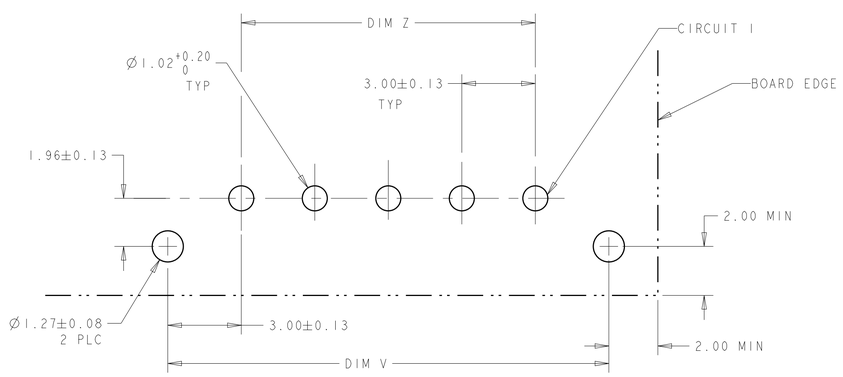

PCB LAYOUT COMPONENT SIDE 4

	6	12,11,2,1	33.00	39.14	37.00	12	3-1445093-2
	6	11,10,3,2	30.00	36.14	34.00	11	3-1445093-1
	6	10,9,2,1	27.00	33.14	31.00	10	3-1445093-0
	6	9,8,3,2	24.00	30.14	28.00	9	2-1445093-9
	6	8,7,2,1	21.00	27.14	25.00	8	2-1445093-8
	6	7,6,3,2	18.00	24.14	22.00	7	2-1445093-7
	6	6,5,2,1	15.00	21.14	19.00	6	2-1445093-6
	6	5,4,3,2	12.00	18.14	16.00	5	2-1445093-5
	6	4,3,2,1	9.00	15.14	13.00	4	2-1445093-4
	6	3,2	6.00	12.14	10.00	3	2-1445093-3
	6	2,1	3.00	9.14	7.00	2	2-1445093-2
SUPERSEDED BY 3-1445093-2	2	12,11,2,1	33.00	39.14	37.00	12	~~1-1445093-2~~
SUPERSEDED BY 3-1445093-1	2	11,10,3,2	30.00	36.14	34.00	11	~~1-1445093-1~~
SUPERSEDED BY 3-1445093-0	2	10,9,2,1	27.00	33.14	31.00	10	~~1-1445093-0~~
SUPERSEDED BY 2-1445093-9	2	9,8,3,2	24.00	30.14	28.00	9	~~1445093-9~~
SUPERSEDED BY 2-1445093-8	2	8,7,2,1	21.00	27.14	25.00	8	~~1445093-8~~
SUPERSEDED BY 2-1445093-7	2	7,6,3,2	18.00	24.14	22.00	7	~~1445093-7~~
SUPERSEDED BY 2-1445093-6	2	6,5,2,1	15.00	21.14	19.00	6	~~1445093-6~~
SUPERSEDED BY 2-1445093-5	2	5,4,3,2	12.00	18.14	16.00	5	~~1445093-5~~
SUPERSEDED BY 2-1445093-4	2	4,3,2,1	9.00	15.14	13.00	4	~~1445093-4~~
SUPERSEDED BY 2-1445093-3	2	3,2	6.00	12.14	10.00	3	~~1445093-3~~
SUPERSEDED BY 2-1445093-2	2	2,1	3.00	9.14	7.00	2	~~1445093-2~~
	FINISH	CON POS W/RET BUMP 5	DIM Z	DIM V	DIM L	NO. OF POSN	PART NUMBER

THIS DRAWING IS A CONTROLLED DOCUMENT.

DIMENSIONS: mm

TOLERANCES UNLESS OTHERWISE SPECIFIED:
0 PLC ±-
1 PLC ±-
2 PLC ±0.20
3 PLC ±-
4 PLC ±-
ANGLES ±-
FINISH 2 6

MATERIAL 1

DWN J. ROOT 10OCT2000
CHK K. WHITAKER 17-APR-2001
APVD C. JONES 17-APR-2001
PRODUCT SPEC 108-1836
APPLICATION SPEC 114-13000
WEIGHT -

TE Connectivity

NAME VERTICAL THRU HOLE HEADER ASSY, 0.76 MIC GOLD CONTACTS, W/PCB PLZN FEATURE, SGL ROW, MICRO MATE-N-LOK(TM)

SIZE A1 | CAGE CODE 00779 | DRAWING NO C-1445093 | RESTRICTED TO -

CUSTOMER DRAWING | SCALE 8:1 | SHEET 1 OF 1 | REV B4

4805 (3/13)